Flywheel Bearing System Work at NASA Glenn

Andy Provenza

October 7, 1998

Selected In-house Work

- Gyroscopic Tilt Mode Control Study
- Backup Bearing Designs & Testing Plan
- Sensor Comparison
- PWM Amplifier Comparison

Gyroscopic Control
Analysis Features

- Assumes modal control
- Tilt mode focus
- Includes cross axis “stiffness & damping”
- Includes bandwidth effects (five 1st order filters)
- Both cross-axis gains are proportional to rotor speed

Results

- Cross-axis stiffness w/ Ω proportionality stabilizes forward whirl
- Low cross-axis damping (gyro canceling) stabilizes forward whirl
- Controller gains need no operator adjustment
- Control effort for cross-axis gains appears reasonable (to 30 krpm)

$$m\ddot{X} + 2KX = 0,$$
$$m\ddot{Y} + 2KY = 0,$$
$$I_T\ddot{\beta} + I_p\omega\dot{\alpha} + \tfrac{1}{2}KL^2\beta = 0,$$
$$I_T\ddot{\alpha} - I_p\omega\dot{\beta} + \tfrac{1}{2}KL^2\alpha = 0.$$

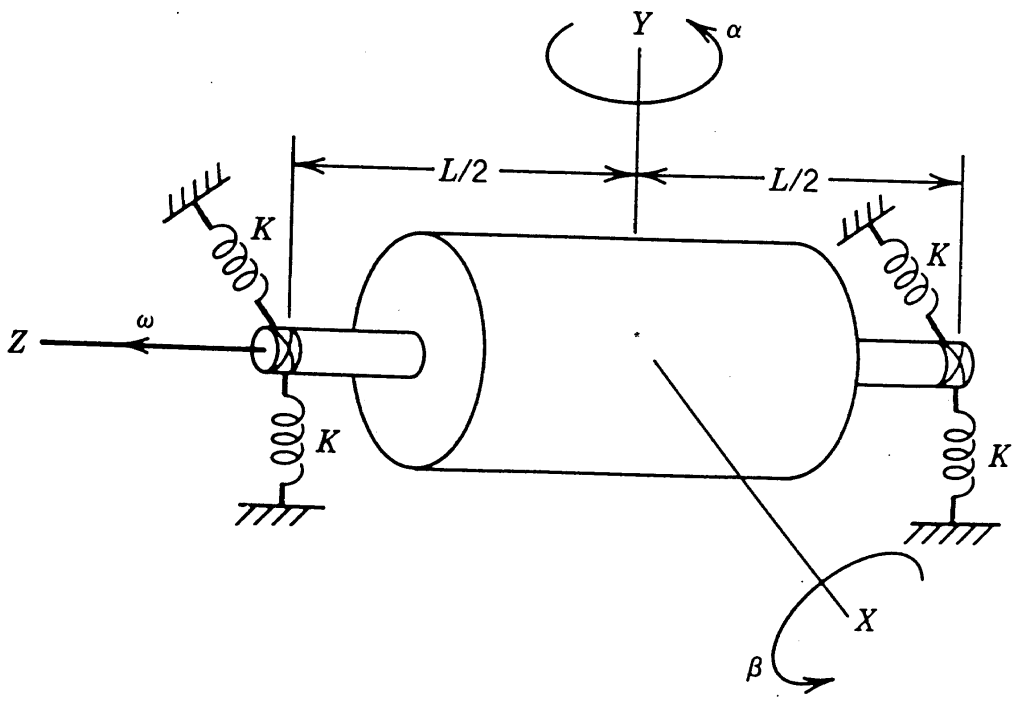

rigid-rotor model with coordinates

CONTROL LAW:

$$\alpha \text{ torque} = -k\alpha - c\dot{\alpha} - k_{cross}\,\Omega\,\beta - c_{cross}\,\Omega\,\dot{\beta}$$

$$\beta \text{ torque} = -k\beta - c\dot{\beta} + k_{cross}\,\Omega\,\alpha + c_{cross}\,\Omega\,\dot{\alpha}$$

Non-spinning tilt mode frequency set near 50 hz

Same-axis damping of c = 40 gives tilt mode width of ~ 5 hz

Eigenvalues without Cross-Axis Feedback. 50 khz Bandwidths (5)

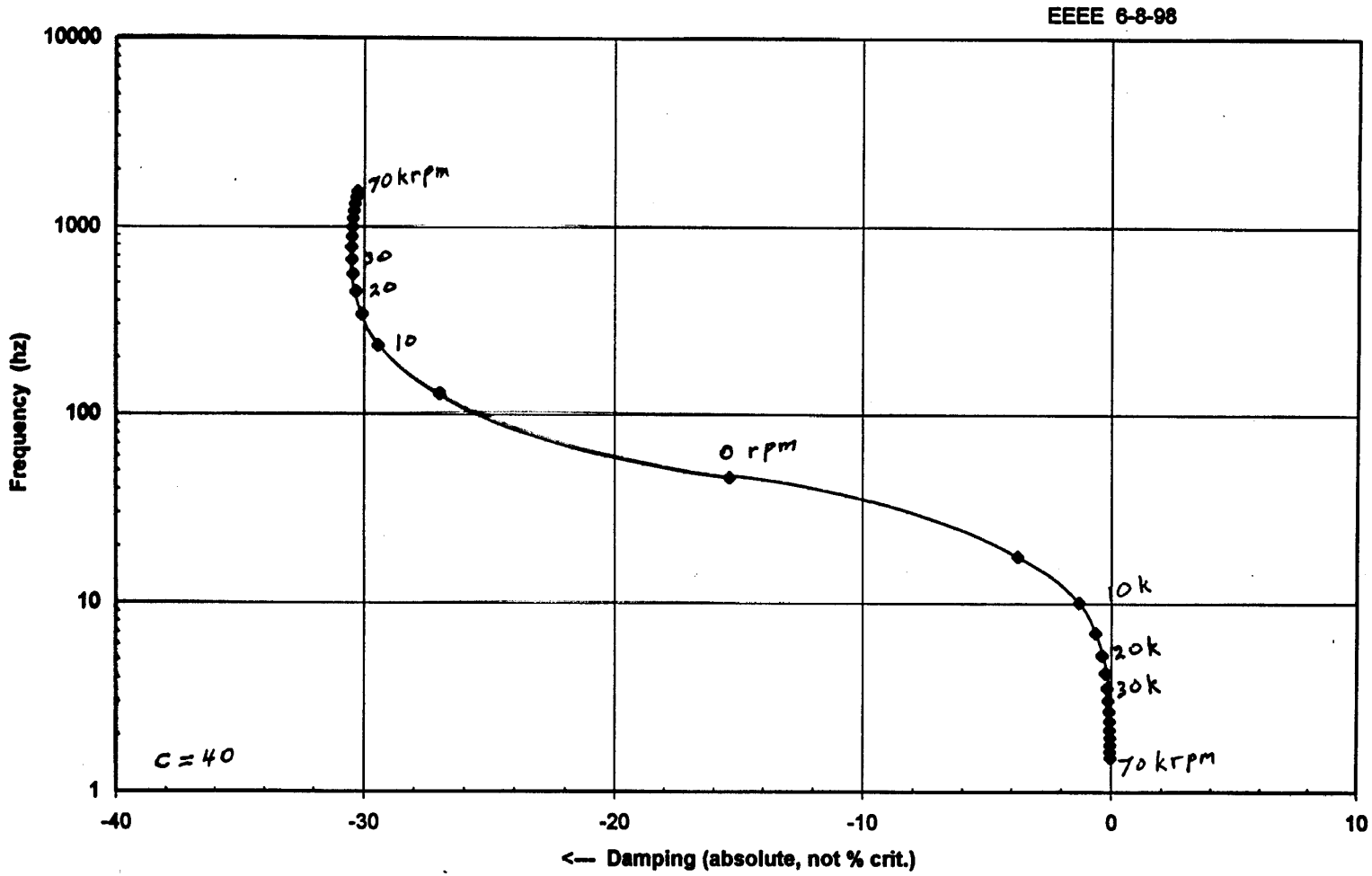

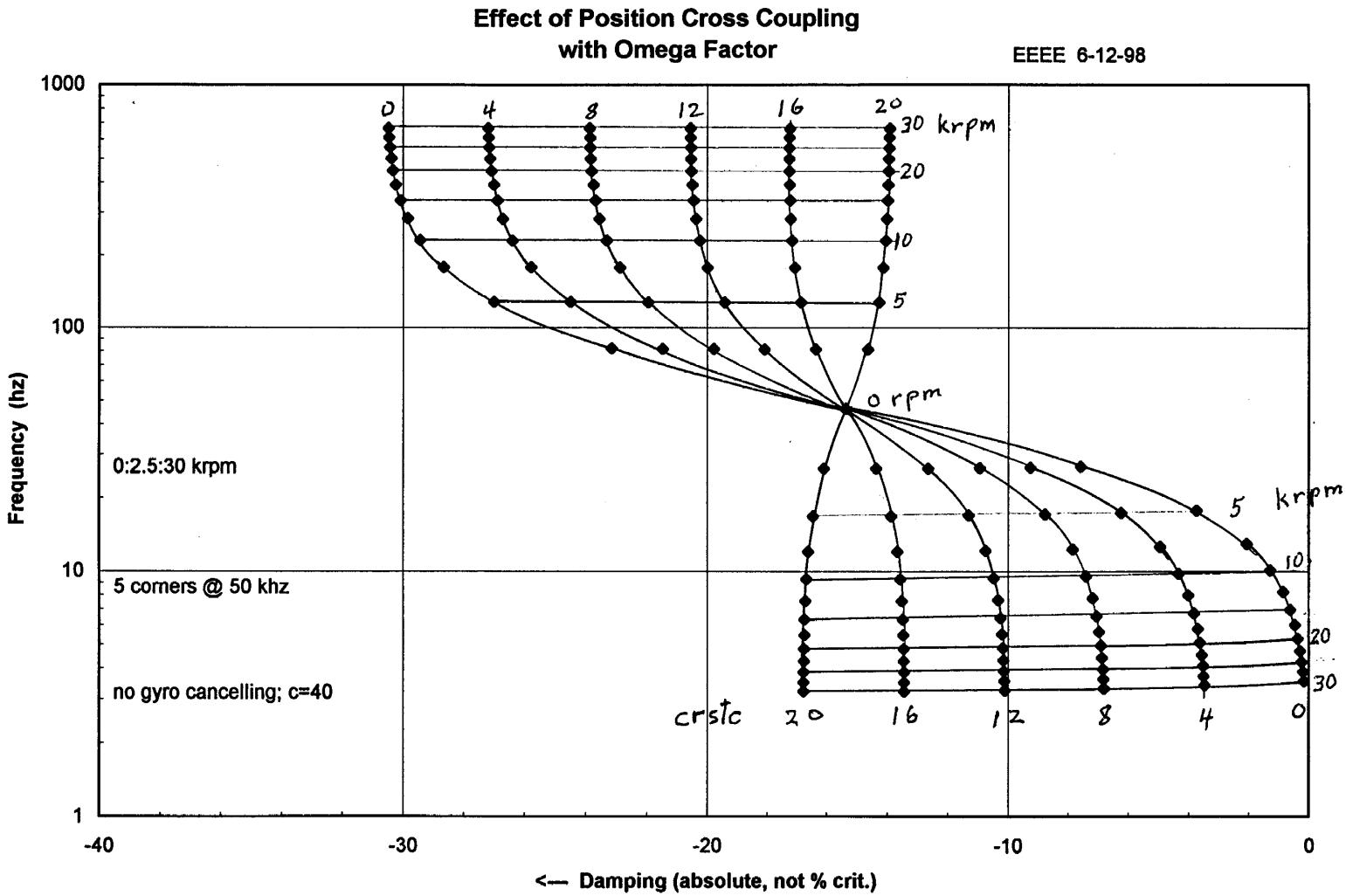
Effect of Position Cross Coupling
with Omega Factor
EEEE 6-12-98
Frequency (hz)
1000
100
10
1
-40
-30
-20
-10
0
<— Damping (absolute, not % crit.)
0:2.5:30 krpm
5 corners @ 50 khz
no gyro cancelling; c=40
0
4
8
12
16
20
30 krpm
20
10
5
0 rpm
5 krpm
10
20
30
crstc
20
16
12
8
4
0

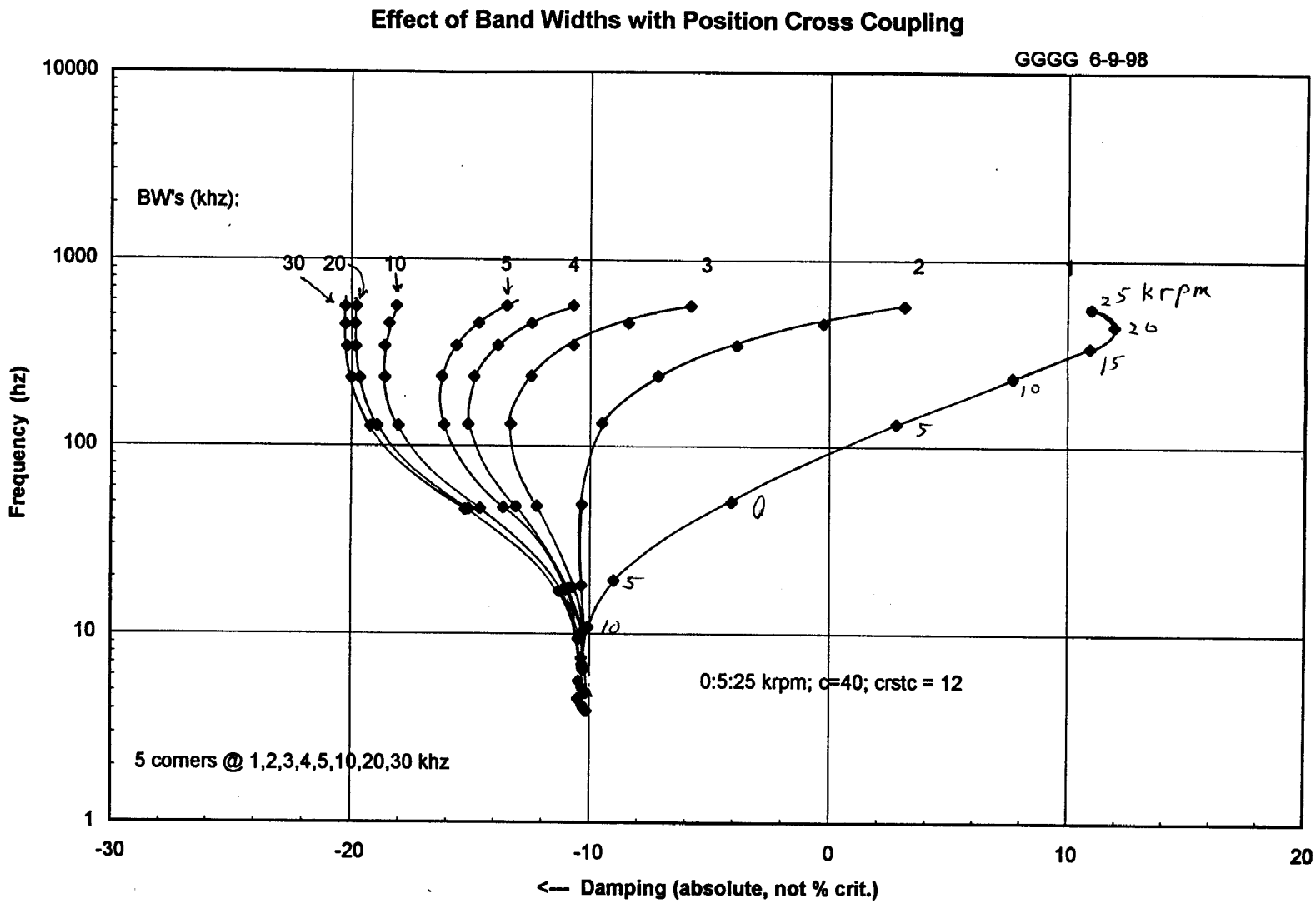
Effect of Band Widths with Position Cross Coupling
GGGG 6-9-98
BW's (khz):
30
20
10
5
4
3
2
1
25 krpm
20
15
10
5
0
5
10
0:5:25 krpm; c=40; crstc = 12
5 corners @ 1,2,3,4,5,10,20,30 khz
10000
1000
100
10
1
Frequency (hz)
-30
-20
-10
0
10
20
<— Damping (absolute, not % crit.)

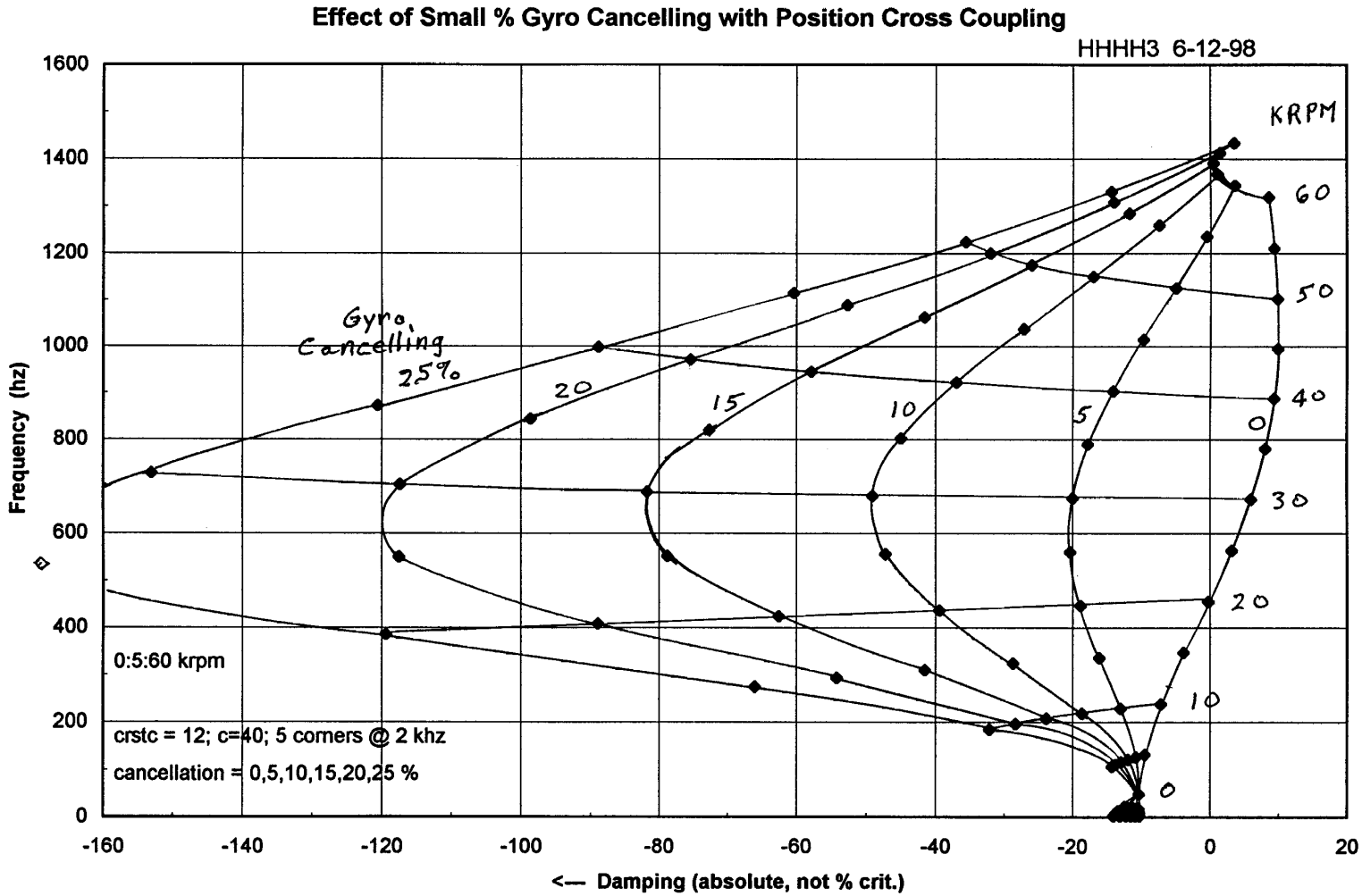
Effect of Small % Gyro Cancelling with Position Cross Coupling
HHHH3 6-12-98
KRPM
60
50
40
30
20
10
0
Gyro Cancelling 25%
20
15
10
5
0
0:5:60 krpm
crstc = 12; c=40; 5 corners @ 2 khz
cancellation = 0,5,10,15,20,25 %
Frequency (hz)
1600
1400
1200
1000
800
600
400
200
0
-160
-140
-120
-100
-80
-60
-40
-20
0
20
<— Damping (absolute, not % crit.)

FAULT TOLERANT MAGNETIC BEARING TEST FACILITY

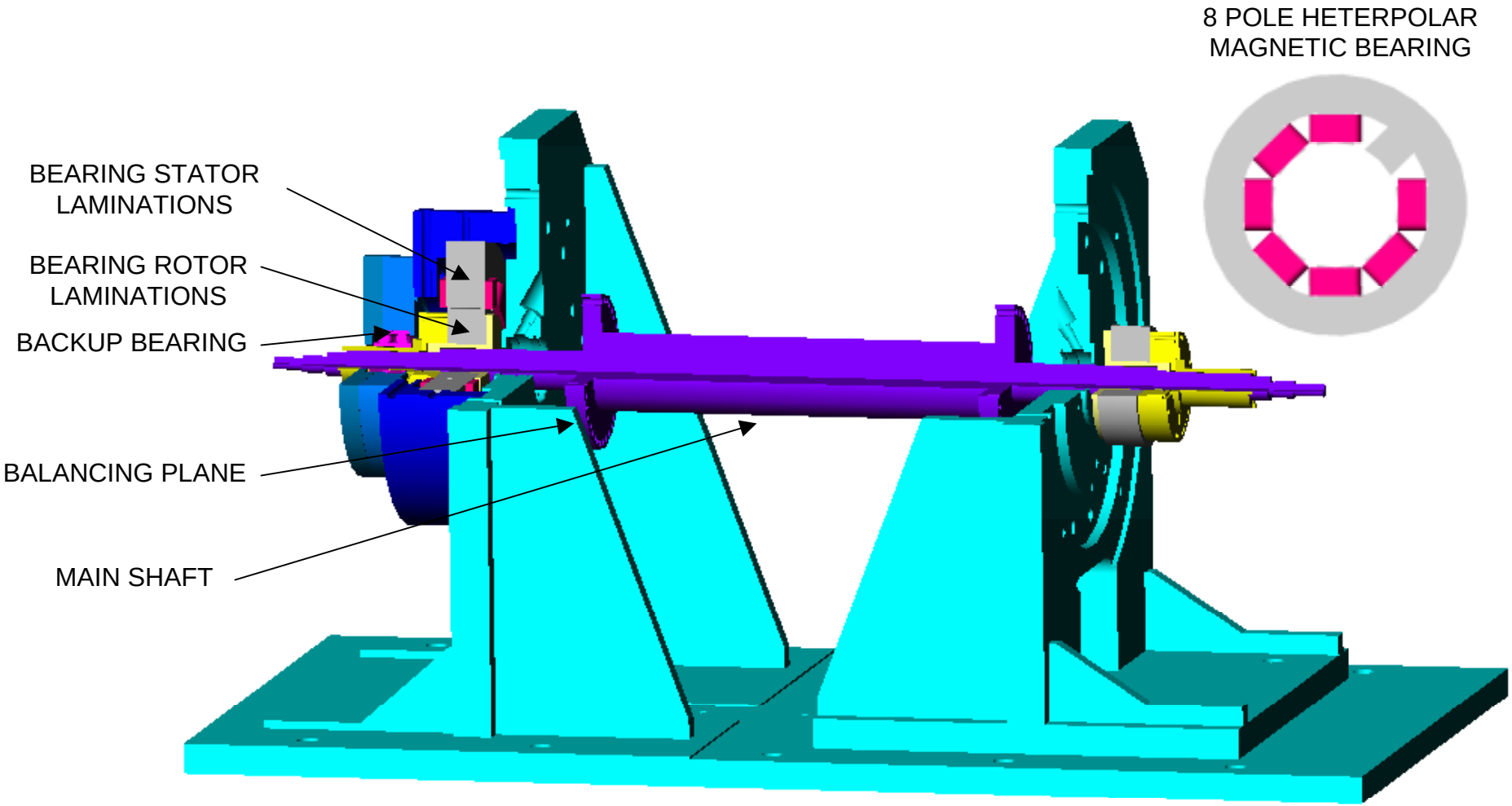

Backup Bearing Concept

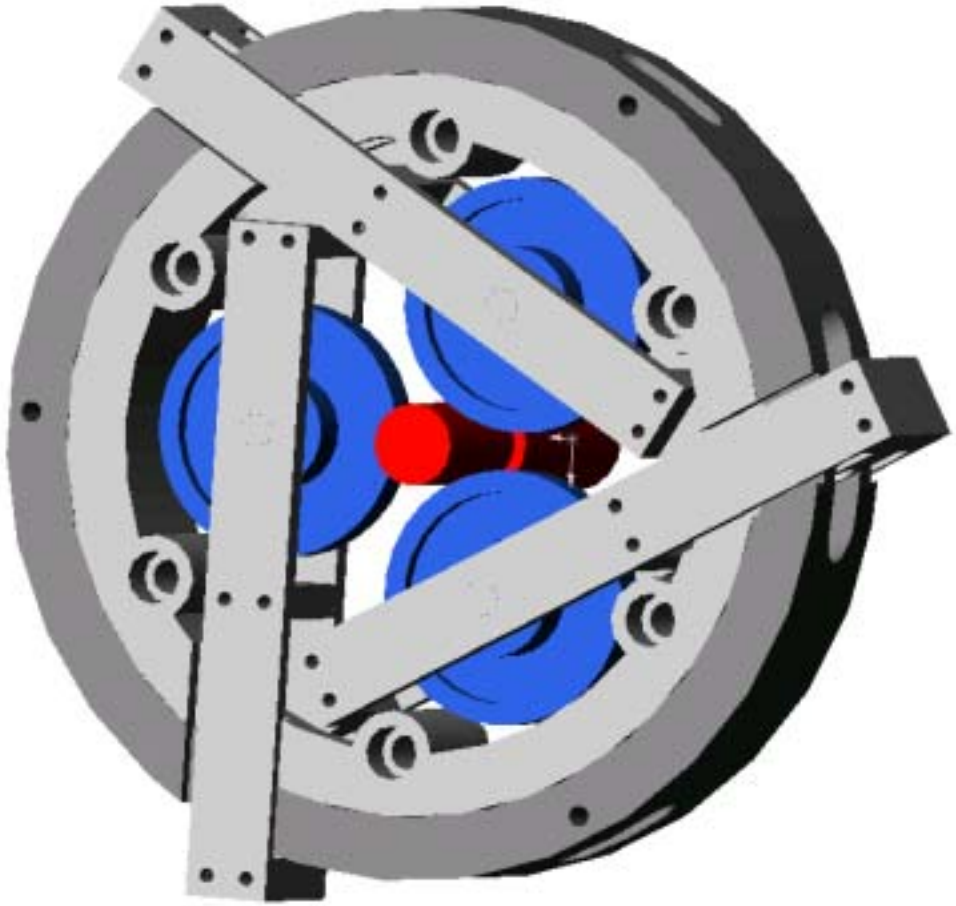

Displacement Sensor Evaluation

- **Objective:** Evaluate non-contact displacement sensors that will function in a space environment to monitor the flywheel rotor and act as feedback for magnetic bearing control
- **Specifications:**
  - Vacuum operation
  - -80 - 500 °F
  - Robust at 60krpm
  - Low noise
  - Shielded from EMI

Sensors Types

- Fiber Optic: Philtec, RC-25
- Optical: Omron
- Inductive: Electro Corp, EMD1060
- Capacitance: Capacitec, HPT-1501-V-N2-5B
- Eddy Current:
  - Bently Nevada, 19000-00-15-36-02
  - Kaman, KD1106-ISU-SFL
- Laser:

Test Facilities

- Bently NevadaTK3 Calibration Instrument
  - Micrometer spindle
  - Wobble Plate, 5000 rpm
- Piezoelectric Translation Actuator
  - Burleigh PZL-100 actuator
- Bently Nevada Rotor Rig with Magnetic Bearings
  - 12,000 rpm
  - Co-locate sensor to magnetic bearings
- High Speed Shaft
  - Barbour Stockwell air turbine (60,000 rpm)

Issues

- Space Qualifiable
- Vacuum Behavior
- Accuracy
  - Translation, Rotation
- Bandwidth
- Flux Interference
- Signal Conditioning
- Electronics Noise
- Surface Finish
- Targets
  - Size
  - Material
  - Lamination vs. Solid
- Price

Amplifier Comparison

- **Objective**:
  - Find a PWM amplifier which switches at high frequency (>50 kHz) with no zero crossing distortion driving typical magnetic bearing impedance
- **Amplifiers Considered:**
  - Copley Controls 25 kHz,50+ kHz
  - AMC advanced design (analog input) 22 kHz
  - AMC digital PWM input 22 kHz
  - APEX high speed PWM 42kHz,250 kHz
- **Testing:**
  - Fault tolerant magnetic bearing rig
  - ACESE Beta Module