LASER Power Transmission

Eliminate wire mass

- ***No ultra-high voltages***
- ***No superconductors***

Accommodates modular designs

Simplifies array peak power management

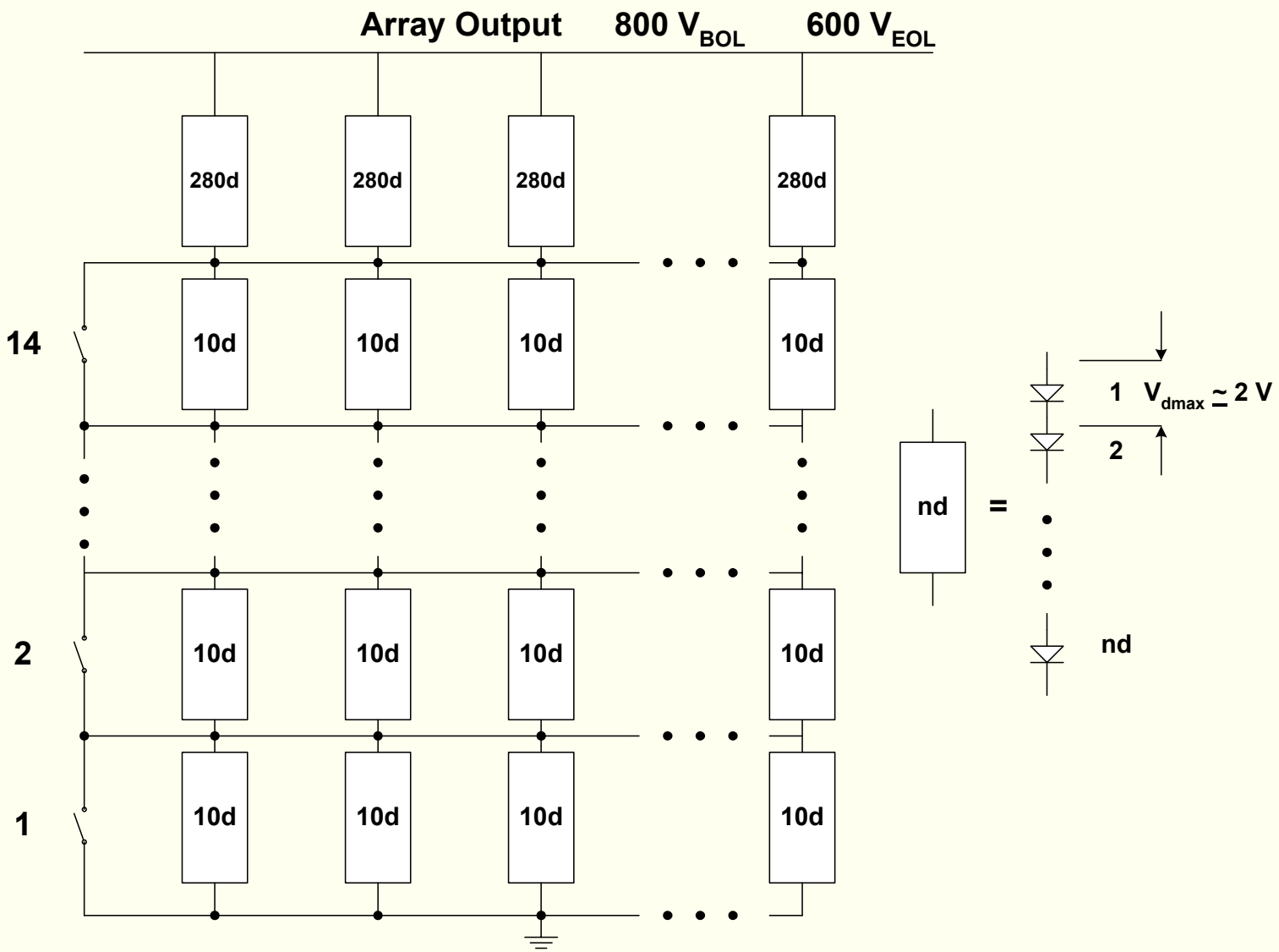

LASER Diode String Switcher

LASER Diode String Switcher

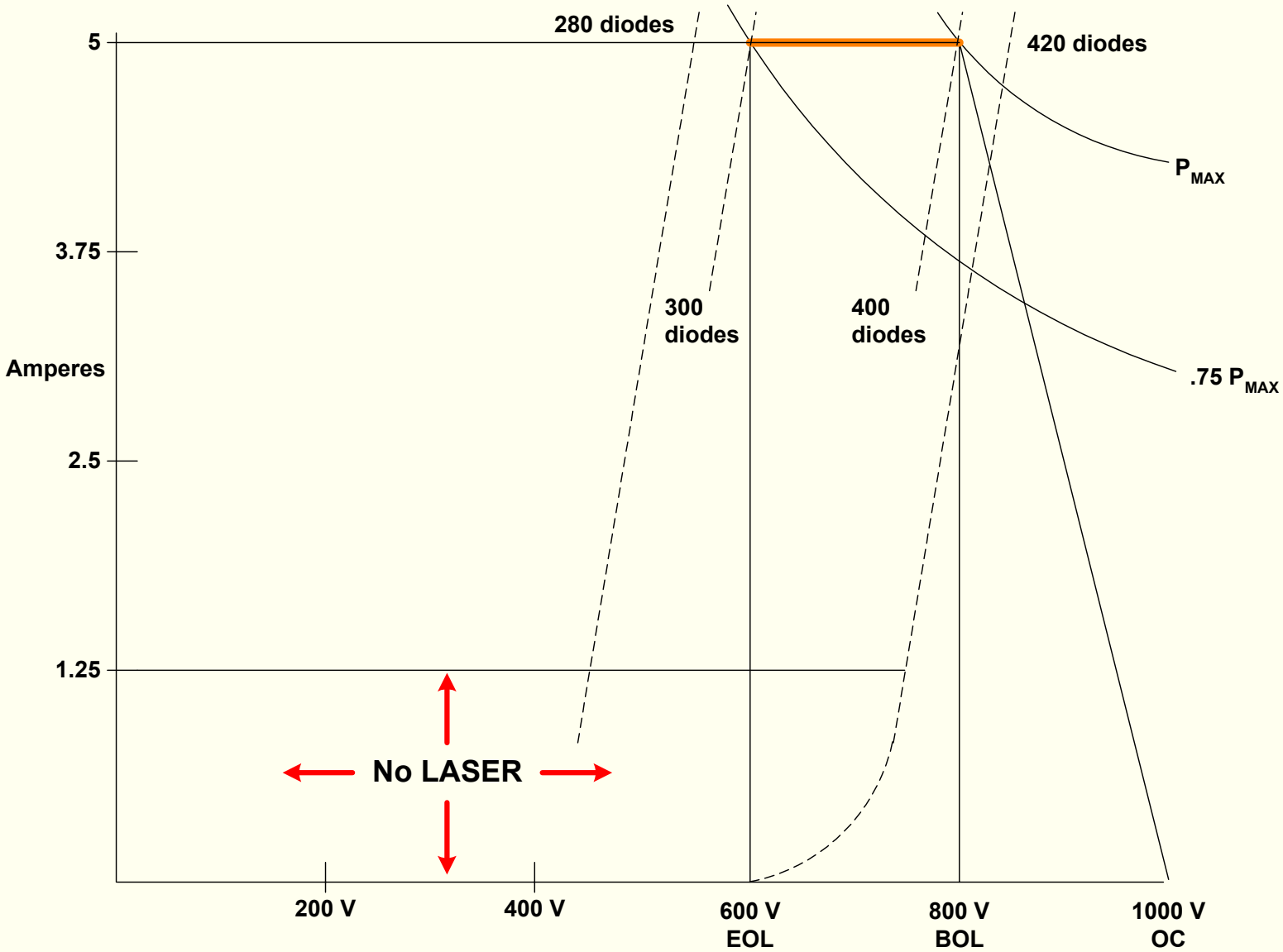

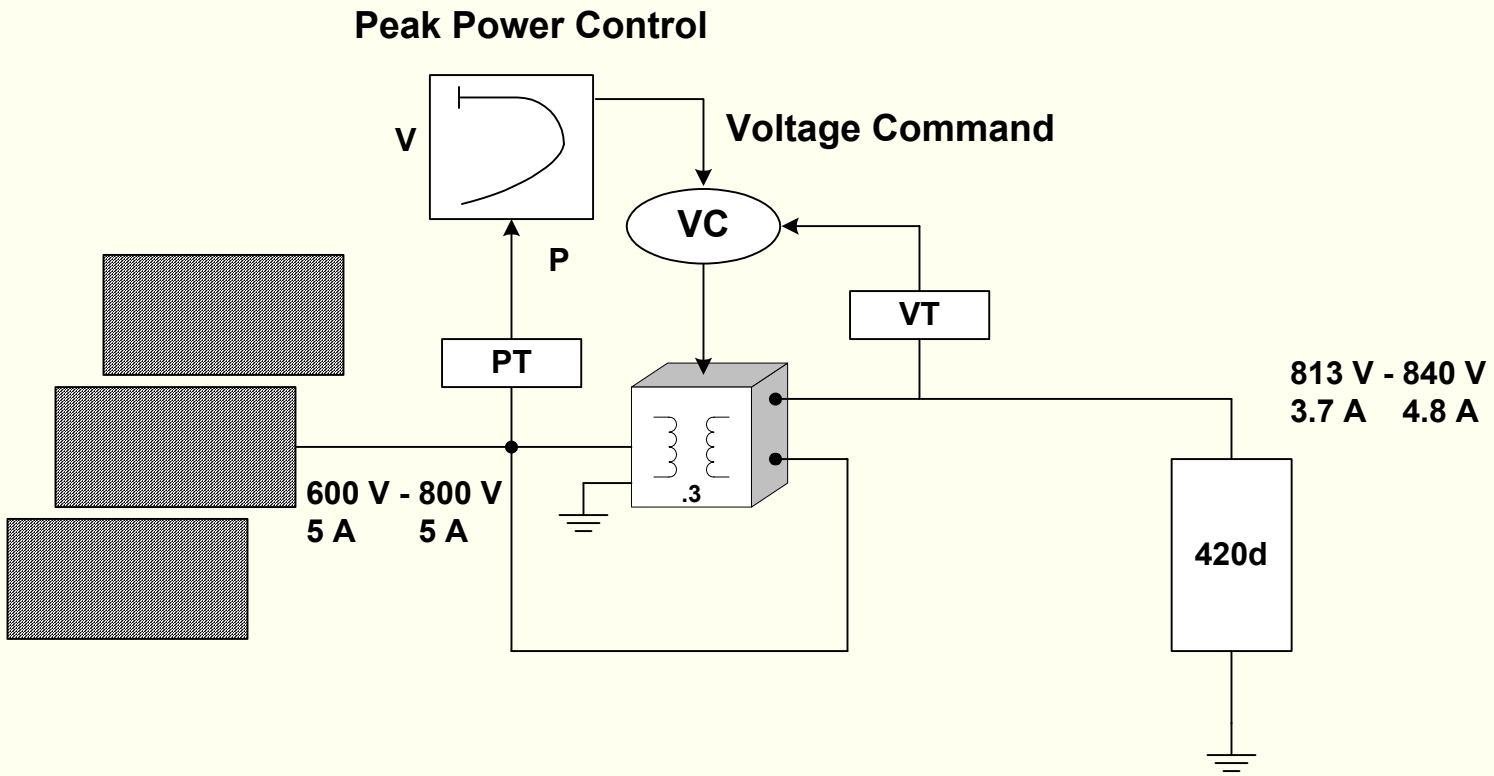

Peak Power Tracking Array Regulator

SCBR Full Sun

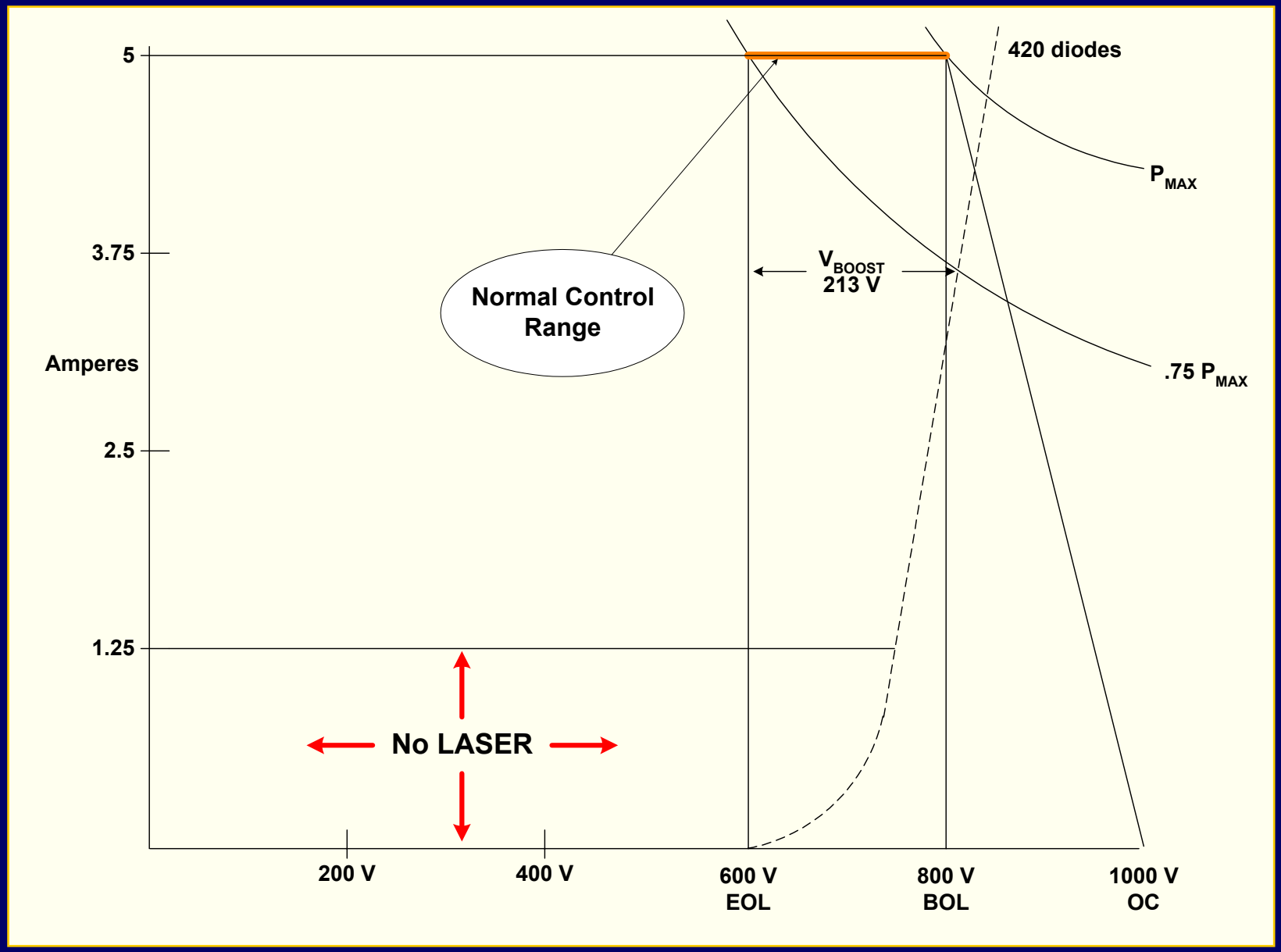

Comparisons

String Switcher

- Discrete control
- Many wires and connections
- 2.5 kg for 4 kW array

Series-Connected Boost Regulator

- Continuous control
- Few connections
- 3 kg for 4 kW array
- Accommodates μ-wave option